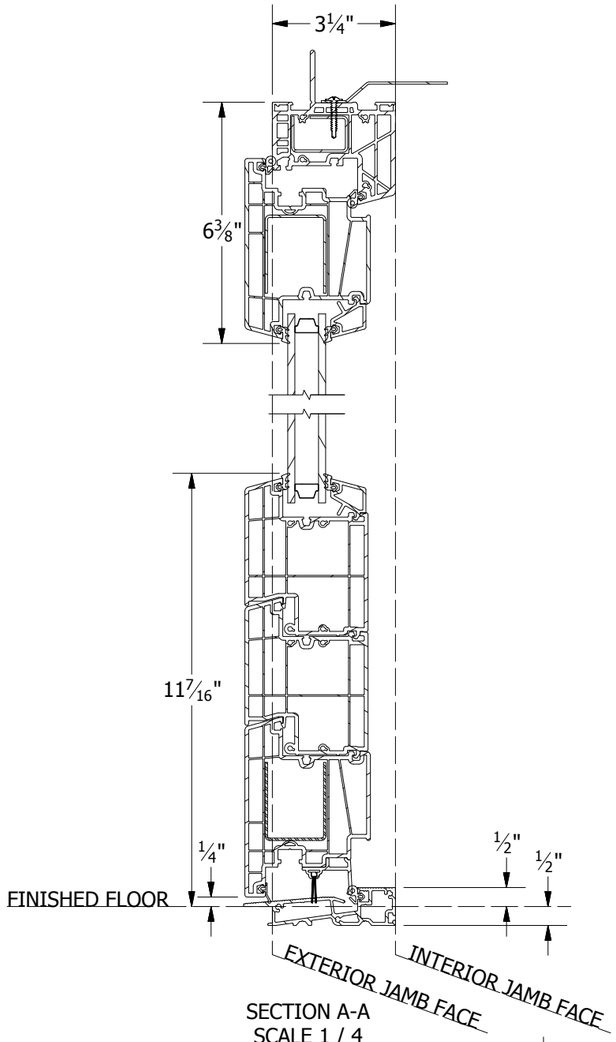

SECTION A-A
SCALE 1 / 4

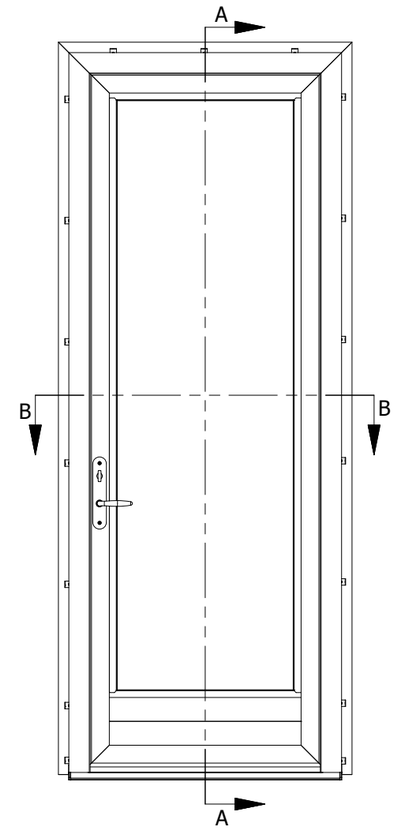

INTERIOR VIEW
SCALE 1 / 20

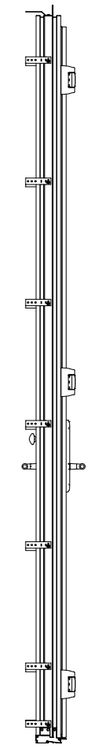

JAMB VIEW
SCALE 1 / 20

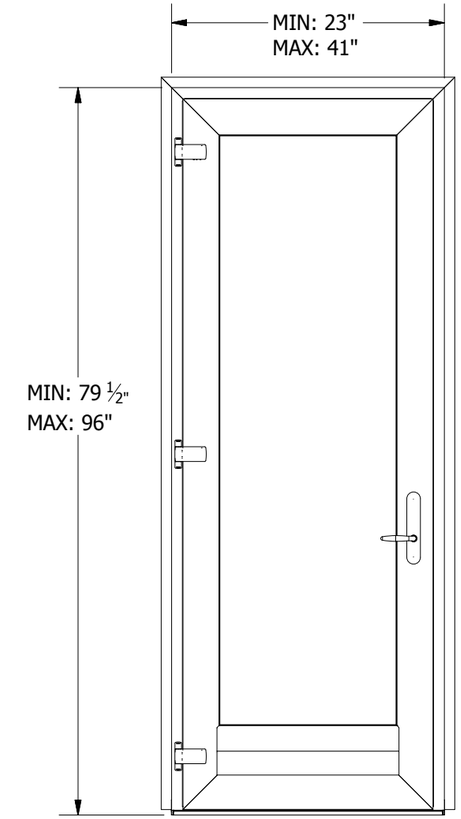

EXTERIOR VIEW
SCALE 1 / 20

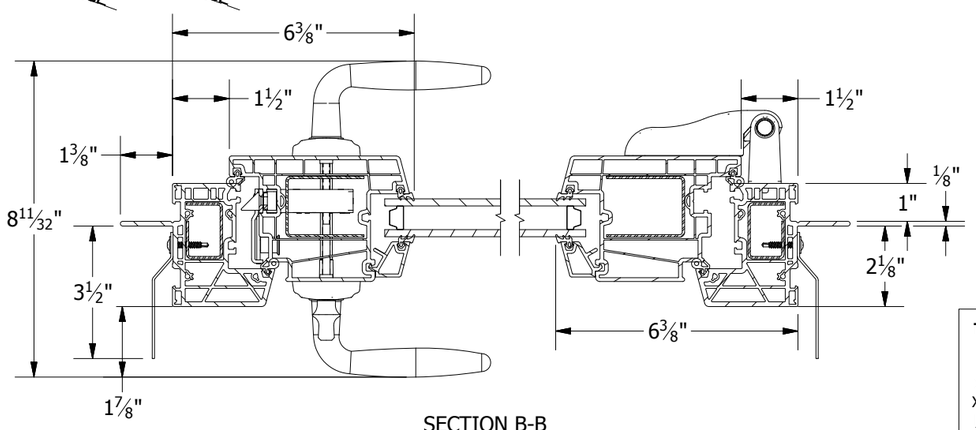

SECTION B-B
SCALE 1 / 4

TOLERANCE DECIMAL X.X ± 0.100 X.XX ± 0.025 X.XXX ± 0.005 FRACTIONAL X/X ± 1/32 ANGULAR X ± 1.0˚ X.X ± 0.2˚	DRAWN bpoutre	12/19/2019	Quality Windows **3420 E Ferry Ave. Spokane, WA 99202 ● www.vpiwindows.com** THIS DOCUMENT IS PROPRIETARY AND CONFIDENTIAL. NO PART OF THIS DOCUMENT MAY BE DISCLOSED IN ANY MANNER TO A THIRD PARTY WITHOUT THE PRIOR WRITTEN CONSENT BY VPI QUALITY WINDOWS.
	CHECKED		
	APPROVED		
	SIZE B / SCALE 1 / 20	SHEET 1 of 1	
	PRODUCT FAMILY 1200 ENVISION		
	PROJECT	SHEET HLOS HP KP LAYOUT	REV B